UNIVERSITY OF SOUTH CAROLINA UPSTATE

RENOVATIONS TO

LIBRARY LIGHTING REPLACEMENT

SPARTANBURG, SOUTH CAROLINA

UPSTATE
USC

S.C. PROJECT NO. H34-9543-JM-F

USC UPSTATE LIBRARY

800 UNIVERSITY WAY
SPARTANBURG, SC 29303

(864)503-5620

DRAWING LIST:

T1.0	TITLE SHEET
A1.2	REFLECTED CEILING PLAN – 2ND FLOOR
E0.1	ELECTRICAL LEGEND, SCHEDULE AND NOTES
E1.1	ELECTRICAL LIGHTING PLAN – 1ST FLOOR
E1.2	ELECTRICAL LIGHTING PLAN – 2ND FLOOR
ED1.2	ELECTRICAL DEMOLITION PLAN – 2ND FLOOR

BURDETTE ENGINEERING
102 Pilgrim Road
Greenville, SC 29607
(864) 297-8717
(864) 297-8719 (FAX)
EMAIL:Bei@BurdetteEngr.com
BEI JOB NO. 12860F1

REVISION		DATE	BY
A	ISSUED FOR REVIEW	1/16/14	LCM/LJK

PROJECT NO. 12860F1
DATE 12/4/13
DRAWN BY LJK/TMP
CHECKED BY DJB

UNIVERSITY OF SC UPSTATE
LIBRARY LIGHTING REPLACEMENT
UPSTATE USC
SC PROJECT NO. H34-9543-JM-F
SPARTANBURG, SOUTH CAROLINA

SHEET NUMBER
T1.0

G:\CAD\12860 USC UPSTATE (BEI IDC)\12860F1 USC-UP LIBRARY LIGHTING REPLACEMENT SECOND FLOOR\12860FT1.0.dwg, 1/17/2014 12:38:28 PM, Adobe PDF

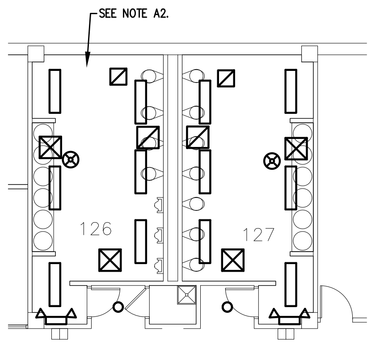

B A1.1 REFLECTED CEILING PLAN – 1ST FLOOR TOILETS
SCALE: 1/8" = 1'-0"

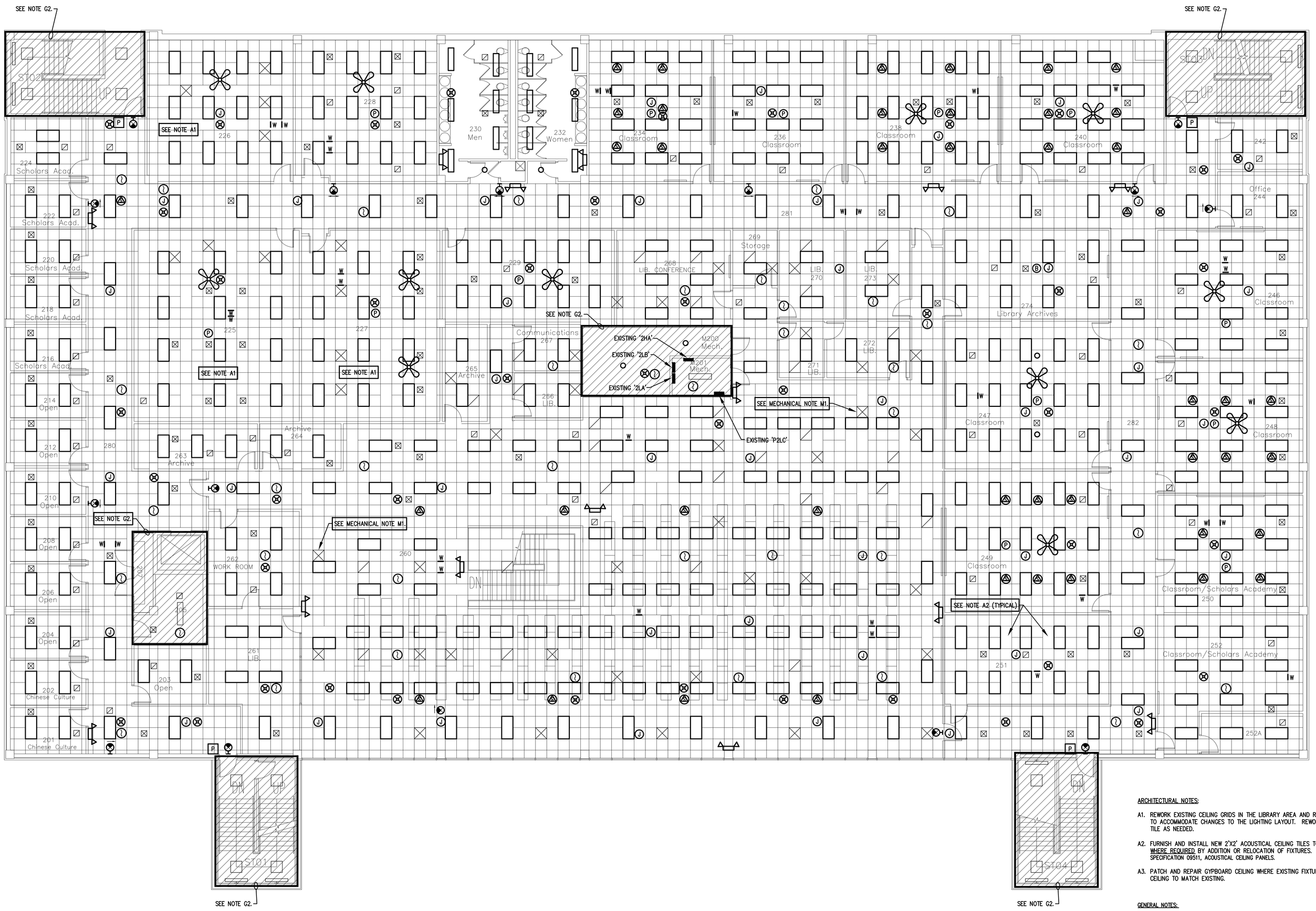

A A1.1 REFLECTED CEILING PLAN – 2nd FLOOR
SCALE: 1/8" = 1'-0"

ARCHITECTURAL NOTES:

A1. REWORK EXISTING CEILING GRIDS IN THE LIBRARY AREA AND ROOMS 225, 226 AND 227 IN ORDER TO ACCOMMODATE CHANGES TO THE LIGHTING LAYOUT. REWORK GRID MEMBERS AND REPLACE TILE AS NEEDED.

A2. FURNISH AND INSTALL NEW 2'X2' ACOUSTICAL CEILING TILES TO EXACTLY MATCH THE EXISTING WHERE REQUIRED BY ADDITION OR RELOCATION OF FIXTURES. REFER TO ARCHITECTURAL SPECIFICATION 09511, ACOUSTICAL CEILING PANELS.

A3. PATCH AND REPAIR GYPBOARD CEILING WHERE EXISTING FIXTURES REMOVED. REPAINT ENTIRE CEILING TO MATCH EXISTING.

GENERAL NOTES:

G1. SEE DRAWING E0.1 FOR SYMBOL LEGENDS.

G2. CROSSHATCHED AREAS INDICATE NO WORK TO BE DONE IN THIS AREA.

G3. CONTRACTOR SHALL TAKE CARE TO COMPLETELY COVER ALL BOOK STACKS WITH PLASTIC WHEN WORKING IN THOSE AREAS.

MECHANICAL NOTES:

M1. RELOCATE SUPPLY DIFFUSERS INDICATED

BURDETTE ENGINEERING
102 Pilgrim Road
Greenville, SC 29607
(864) 297-8717
(864) 297-8719 (FAX)
BEI JOB NO. I2860F1
EMAIL:Bei@BurdetteEngr.com

REVISION		DATE	BY
A	ISSUED FOR REVIEW	1/16/14	CDM/LJK

PROJECT NO. I2860F1
DATE D/G/I
DRAWN BY LJK/CMP
CHECKED BY DJB

UNIVERSITY OF SC UPSTATE LIBRARY LIGHTING REPLACEMENT

S.C. PROJECT NO. H34-9543-JM-F
SPARTANBURG, SOUTH CAROLINA

UPSTATE USC

SHEET NUMBER
A1.2
OF SHEETS

G:\CAD\I2860 USC UPSTATE (BEI DOC)\I2860F1 USC-UP LIBRARY LIGHTING REPLACEMENT SECOND FLOOR\I2860FA1.2.dwg, 1/17/2014 12:38:00 PM, Adobe PDF

SYMBOL	DESCRIPTION
A-1,3	HOME RUN TO LIGHTING/SERVICE PANEL. HASH MARKS, WHEN SHOWN, INDICATE NUMBERS OF CONDUCTORS. "/" INDICATES HOT WIRE, "//" INDICATES NEUTRAL CONDUCTOR,"//" INDICATES GROUND CONDUCTOR. HOME RUN NOTE INDICATES PANEL NAME AND CIRCUIT NAME OR FEEDER TAG. CONDUCTORS SHALL BE #12 AWG IN 3/4" CONDUIT UNLESS NOTED OTHERWISE. ANY HOME RUN OR CONDUIT WITHOUT HASH MARKS IS TO CONTAIN 3 CONDUCTORS; 1 HOT, 1 NEUTRAL, AND 1 EQUIPMENT GROUND, EACH HOT CIRCUIT SHALL BE PAIRED WITH A SEPARATE NEUTRAL CONDUCTOR. SHARING OF NEUTRAL CONDUCTORS BETWEEN CIRCUITS IS NOT ALLOWED.
	EXPOSED CONDUIT
	CONDUIT RUN IN SLAB OR UNDERGROUND.
	CONDUIT RUN CONCEALED ABOVE CEILING OR IN WALLS, UNLESS NOTED OTHERWISE.
	CONDUIT JUNCTION IN CONDULET OR JUNCTION BOX.
	FLEXIBLE CONDUIT
	CONDUIT TURNING UP
	CONDUIT TURNING DOWN
J H	JUNCTION BOX STEM INDICATES WALL MOUNTED
	LIGHTING OR SERVICE PANEL, SURFACE MOUNTED.(208V)
WIRING DEVICES	
	NOTE: ALL WIRING DEVICES TO BE IVORY, WITH #302 STAINLESS STEEL COVERPLATE (FLUSH MOUNTED) UNLESS NOTED OTHERWISE ON THE DRAWING OR SPECIFICATIONS.
	SWITCH SYMBOLS
S	SINGLE POLE LIGHTING SWITCH 120-277 VOLT, 20 AMP, SPEC GRADE. LETTER ("a") DESIGNATES WHICH FIXTURES ARE CONTROLLED FROM WHICH SWITCHES WHEN MULTIPLE SWITCHES ARE USED ON ONE CIRCUIT
S_3	SAME AS "S" ABOVE EXCEPT "3" IN SUBSCRIPT DENOTES 3-WAY SWITCH.
S_D	DIMMER SWITCH WITH SLIDE CONTROL
	OCCUPANCY SENSOR LEGEND:
	WATT STOPPER #CX-100, SEE WATTSTOPPER NOTES.
P_W	WATT STOPPER #PW-100, SEE WATTSTOPPER NOTES.
FIRE ALARM, COMMUNICATIONS AND CONTROLS	
FACP	FIRE ALARM CONTROL PANEL
ANN	REMOTE ANNUNCIATOR PANEL
	AREA SMOKE DETECTOR.
	FIRE ALARM SYSTEM STROBE UNIT ONLY
P	MANUAL FIRE ALARM PULL STATION
W	WIRELESS INTERNET CONNECTION
P	PROJECTOR
	SPEAKER
LIGHTING SYMBOLS:	
	2' X 4' CEILING MOUNTED FLUORESCENT FIXTURE
	EXISTING 2' X 2' CEILING MOUNTED FLUORESCENT FIXTURE
	SURFACE CEILING MOUNTED OR RECESSED DOWNLIGHT
	EXISTING EXIT FIXTURE WITH INTEGRAL BATTERIES – ARROW INDICATES ILLUMINATED DIRECTIONAL ARROWS, SHADED SECTION INDICATES FACE WHICH IS ILLUMINATED. STEM INDICATES WALL MOUNTED. ALL EXIT LIGHTS SHALL BE MOUNTED TO THE STRUCTURE.
	EXISTING EMERGENCY LIGHTING UNIT. ALL EMERGENCY LIGHTS SHALL BE MOUNTED TO THE STRUCTURE.
	EXISTING COMBINATION EMERGENCY LIGHT AND EXIT FIXTURE.
HVAC SYMBOLS:	
	1'x1' RETURN
	1'x1' SUPPLY
	2'x2' RETURN
	2'x2' SUPPLY

WATTSTOPPER OCCUPANCY SENSOR NOTES:

PRIOR TO ORDERING, FULL SHOP DRAWING SUBMITTAL SHALL BE PROVIDED INDICATING MANUFACTURER'S SPECIFIC EQUIPMENT CUT SHEETS AND LAYOUTS OF OCCUPANCY SENSORS. FINAL DETERMINATION OF CIRCUITING, VOLTAGE, QUANTITY OF POWER PACKS REQUIRED, AND SETTING OF SENSITIVITY/TIME ADJUSTMENTS ARE THE RESPONSIBILITY OF THE INSTALLING CONTRACTOR. MANUFACTURER'S INSTALLATION INSTRUCTIONS SHALL BE ADHERED TO.

1. ALL SENSOR LOCATIONS ARE APPROXIMATE. REFER TO MANUFACTURER'S INSTALLATION INSTRUCTIONS PRIOR TO INSTALLATION. IF PENDANT MOUNTED FIXTURES ARE PRESENT, LOCATION AND COVERAGE OF SENSORS SHOULD BE REVIEWED.
2. ULTRASONIC CEILING MOUNT SENSORS REQUIRE THEY BE LOCATED NO CLOSER THAN 6' TO AIR SUPPLY/ RETURN REGISTERS.
3. CONTRACTOR IS RESPONSIBLE FOR PROPER SENSITIVITY AND TIME DELAY SETTINGS, VERIFICATION OF MANUFACTURER'S RECOMMENDED PLACEMENT, AND FIELD VERIFICATION OF CIRCUITS WITH RESPECT TO POWER PACK PLACEMENT.
4. CONTRACTOR IS RESPONSIBLE FOR FIELD VERIFICATION OF REQUIRED NUMBER OF POWER PACKS.
   A. ONE POWER PACK IS REQUIRED FOR EACH CIRCUIT THAT IS TO BE CONTROLLED.
   B. MAXIMUM NUMBER OF SENSORS THAT CAN BE WIRED IN PARALLEL TO A SINGLE POWER PACK IS DEPENDENT ON SENSOR MODEL (SEE INDIVIDUAL DATA SHEETS FOR mA CONSUMPTION).

GENERAL LIGHTING NOTES:

1. MANUFACTURERS & NUMBERS ARE LISTED TO ESTABLISH QUALITY ONLY AND NOT TO LIMIT COMPETITION. PRIOR TO BIDDING, SUBSTITUTIONS ARE ALLOWED SUBJECT TO SUBMITTAL DATA, PHOTOMETRICS, AND ENGINEERS APPROVAL AS REQUIRED BY SPECIFICATIONS.
2. ALL FLUORESCENT FIXTURES SHALL HAVE PREMIUM ELECTRONIC BALLASTS WITH 90% MIN. BALLAST FACTOR AND MAX. THD OF 10%. ALL TROFFERS TO HAVE T-8 LAMPS AND .125 INCH LENSES, MINIMUM UNLESS NOTED. ALL FIXTURES TO BE PAINTED AFTER FABRICATION. BALLASTS SHALL BE MANUFACTURED BY SYLVANIA, ADVANCE, OR UNIVERSAL. LAMPS SHALL BE MANUFACTURED BY G.E. OR SYLVANIA.
3. ALL FIXTURES TO BE U.L. LABELED. CONTRACTOR SHALL VERIFY BEFORE SUBMITTING FIXTURE.
4. PROVIDE ALL MOUNTING ACCESSORIES, BAR HANGARS, AND HARDWARE REQUIRED.

LIGHTING FIXTURE SCHEDULE

FIXTURE TYPE	FIXTURE DESCRIPTION	ACCEPTABLE MANUFACTURERS	MOUNTING HEIGHT	LAMPS	FIXTURE WATTAGE	VOLTAGE
TB2	RECESSED 2 X 4, SPEC GRADE STATIC TROFFER, 3 LAMP, FLAT WHITE ALUMINUM DOOR, 22 GA. STEEL, PAINTED AFTER FABRICATION, .125 MIN LENS, ELECTRONIC BALLAST BY ADVANCE OR UNIVERSAL.	LITHONIA # 2GTB-332-A12-MVOLT-1/3GEB10IS OR APPROVED EQUAL.	CEILING	3-F032T8/35K	84	UNIVERSAL VOLTAGE OR MULTI-TAP
TBR2	SAME AS FIXTURE TYPE 'TB2' ABOVE EXCEPT PROVIDED WITH A RAPID START ELECTRONIC BALLAST BY ADVANCE OR UNIVERSAL.	LITHONIA # 2GTB-332-A12-MVOLT-1/3GEB10RS OR APPROVED EQUAL.	CEILING	3-F032T8/35K	84	UNIVERSAL VOLTAGE OR MULTI-TAP
TC2	RECESSED 2X4, SPEC GRADE STATIC TROFFER, 2 LAMP, FLAT WHITE ALUMINUM DOOR, 22 GA. STEEL, PAINTED AFTER FABRICATION, .125 MIN LENS, ELECTRONIC BALLAST BY ADVANCE OR UNIVERSAL.	LITHONIA # 2GTB-232-A12-MVOLT-GEB10IS OR APPROVED EQUAL.	CEILING	2-F032T8/35K	56	UNIVERSAL VOLTAGE OR MULTI-TAP
TCR2	SAME AS FIXTURE TYPE 'TC2' ABOVE EXCEPT PROVIDED WITH A RAPID START ELECTRONIC BALLAST BY ADVANCE OR UNIVERSAL.	LITHONIA # 2GTB-232-A12-MVOLT-GEB10RS OR APPROVED EQUAL.	CEILING	2-F032T8/35K	56	UNIVERSAL VOLTAGE OR MULTI-TAP
RF	8" DIA. RECESSED CAN LIGHT WITH CLEAR ALZAK REFLECTOR FOR 2-26W PL LAMPS.	PORTOLIO # C7226-E-7250-U LITHONIA # AF2/26QT-BAR-GEB PRESCOLITE # CFR826UEB-ST492A	CEILING	2-F26DTT/35K	55	UNIVERSAL VOLTAGE OR MULTI-TAP
RR	EXISTING 2-LAMP, 1'X4' RECESSED FLUORESCENT TO BE RETROFITTED WITH NEW T8 LAMP HOLDERS, LAMPS, AND ELECTRONIC BALLAST BY ADVANCE OR UNIVERSAL.	EXISTING, SEE DESCRIPTION TO THE LEFT.	CEILING	2-F032T8/35K	56	UNIVERSAL VOLTAGE OR MULTI-TAP
RS	4' CEILING MOUNTED VANDAL RESISTANT FLUORESCENT, 2 LAMP, OPAL LENS, WHITE HOUSING, ELECTRONIC BALLAST BY ADVANCE OR UNIVERSAL.	LUMINAIRE #VPF8-4-2F32T8-120-OP-WHT-TX/SD OR APPROVED EQUAL.	CEILING	2-F032T8/35K	56	UNIVERSAL VOLTAGE OR MULTI-TAP

ELECTRICAL GENERAL NOTES:

1. INSPECT SITE PRIOR TO SUBMITTING BID. DRAWINGS ARE INTENDED TO COVER THE REQUIRED ELECTRICAL SYSTEMS. DRAWINGS MAY NOT SHOW COMPLETE OR ACCURATE DETAILS OF THE BUILDING OR SYSTEM IN EVERY RESPECT. IT IS THE RESPONSIBILITY OF THE CONTRACTOR TO OBTAIN ANY ADDITIONAL INFORMATION AS REQUIRED.
2. CONFORM TO THE NATIONAL ELECTRICAL CODE (2008), IBC (2009), APPLICABLE NEMA, ANSI AND IEEE PUBLICATIONS, U.L. AND ADA STANDARDS AND OSHA REQUIREMENTS. COMPLY WITH LOCAL, COUNTY, STATE AND NATIONAL CODES HAVING JURISDICTION.
3. FURNISH AND INSTALL ALL MATERIALS IN A NEAT AND WORKMANLIKE FASHION. ALL MATERIALS SHALL BE NEW, WITH FIRST QUALITY AND UL LABEL.
4. VERIFY ALL DIMENSIONS AND CLEARANCES PRIOR TO INSTALLATION OF EQUIPMENT AND RACEWAYS. CONTRACTOR IS RESPONSIBLE FOR COORDINATION OF WORK WITH THAT OF ALL OTHER TRADES AS REQUIRED.
5. CONDUIT SHALL BE EMT FOR BRANCH CIRCUIT WIRING AS ALLOWED BY NEC, EXCEPT THAT SET SCREW OR CRIMP FITTINGS ARE NOT ALLOWED. WHERE EXPOSED TO PHYSICAL DAMAGE CONDUITS SHALL BE RIGID GALVANIZED STEEL. MINIMUM CONDUIT SIZE SHALL BE 3/4". ALL CONDUCTORS SHALL BE TYPE THHN/THWN, STRANDED 600V COPPER BUILDING WIRE. MINIMUM SIZE SHALL BE #12 AWG COPPER UNLESS NOTED.
6. PROVIDE GROUNDING FOR ALL EQUIPMENT IN ACCORDANCE WITH ARTICLE 250 OF THE NATIONAL ELECTRICAL CODE. GROUND SERVICE TO BUILDING STEEL, DRIVEN GROUND ROD AND COLD WATER PIPE.
7. ALL ENCLOSURES SHALL BE OF THE NEMA TYPE WHICH IS SUITABLE FOR THE APPLICATION.
8. SEAL ALL CONDUIT PENETRATIONS TO MATCH RATING OF WALL BEING PENETRATED.
9. ALL WORK SHALL HAVE PROPER LABELING AND NAMEPLATES. ALL CIRCUITS SHALL BE LABELED AT PANELS AND BOXES AS INDICATED. ALL PANELS AND DISCONNECTS ARE TO BE PERMANENTLY MARKED WITH NAME OR EQUIPMENT SERVED. ALL PANELS ARE TO BE PROVIDED WITH TYPEWRITTEN PANEL SCHEDULES.
10. ALL BREAKERS ON CIRCUITS SUPPLYING HVAC EQUIPMENT SHALL BE TYPE HACR BREAKERS.
11. THOROUGHLY CLEAN ALL EQUIPMENT AND SYSTEMS BEFORE PLACING IN OPERATION. RESTORE FINISHED SURFACES IF DAMAGED AND DELIVER THE ENTIRE INSTALLATION IN AN APPROVED CONDITION. INSTRUCT THE OWNERS' PERSONNEL IN THE PROPER OPERATION AND MAINTENANCE OF THE SYSTEMS. FURNISH TO THE OWNER THREE SETS OF OPERATION AND MAINTENANCE MANUALS FOR EACH SYSTEM.
12. GUARANTEE THE WORK INSTALLED FOR A PERIOD OF ONE YEAR AFTER DATE OF FINAL ACCEPTANCE. DEFECTS WHICH APPEAR AS A RESULT OF NORMAL USAGE SHALL BE REMEDIED BY THE CONTRACTOR TO THE COMPLETE SATISFACTION OF THE OWNER WITHOUT COST TO THE OWNER.
13. CONTRACTOR SHALL KEEP CURRENT A SET OF PLANS FOR THE DURATION OF CONSTRUCTION WITH ALL CHANGES TO WORK NEATLY AND ACCURATELY MARKED IN RED AND SHALL TURN OVER TO OWNER AT COMPLETION OF PROJECT.
14. ALL ELECTRICAL EQUIPMENT SHALL BE INSTALLED TO MEET SEISMIC REQUIREMENTS OF 2009 IBC AND SHALL BE SUBJECT TO SPECIAL INSPECTION REQUIREMENTS, CHAPTER 17 OF 2009 IBC AS IT RELATES TO ELECTRICAL EQUIPMENT.

ABBREVIATIONS:

AFF	ABOVE FINISH FLOOR	MH	MAN HOLE
ACH	ABOVE COUNTER HEIGHT	MDP	MAIN DISTRIBUTION PANEL
BKR	BREAKER	NTS	NOT TO SCALE
CU	COPPER	PH	PHASE
CKT	CIRCUIT	PNL	PANEL
DWG	DRAWING	RECPT	RECEPTACLE (R.)
EC	ELECTRICAL CONTRACTOR	REQD	REQUIRED
FU	FUSE	SW	SWITCH
FWE	FURNISHED WITH EQUIPMENT	UNO	UNLESS NOTED OTHERWISE
LTG	LIGHTING (L.)	W/	WITH
MLO	MAIN LUGS ONLY	WP	WEATHER PROOF
MCB	MAIN CIRCUIT BREAKER	XFMR	TRANSFORMER
MFR	MANUFACTURER		

PROVIDE FIRESTOPPING THRU ALL RATED (1 HOUR AND ABOVE) WALLS. FIRESTOPPING SHALL BE 3M CP 25WB CAULK OR FIREDAM 150 CAULK OR EQUAL. FIRESTOPPING SHALL BE AS REQUIRED TO MAINTAIN A U.L. SYSTEM CLOSURE. PROVIDE U.L. NO. AND MANUFACTURER'S SPECIFICATION AND INSTALLATION DRAWING FOR ALL SUBSTITUTION REQUESTS.

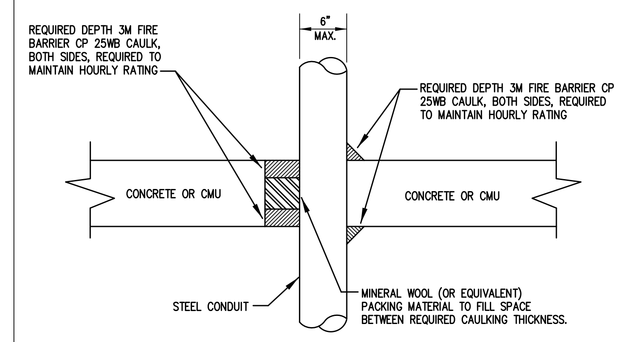

TYPICAL CONDUIT SLEEVE DETAIL | A

ALL FIXTURES INSTALLED SHALL HAVE AT LEAST (2) SEISMIC SLACK WIRES INSTALLED PER CISCA STANDARDS FOR SEISMIC CLASSIFICATION 'C'. DETAIL SHOWN FOR FIXTURES LESS THAN 56 lbs. FIXTURES 56 lbs. AND OVER SHALL HAVE APPROVED HANGERS. SLACK WIRES PROVIDED AND INSTALLED BY DIVISION 16.

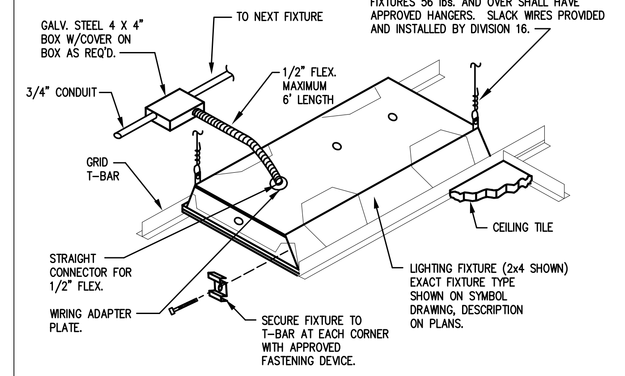

TYPICAL RECESSED FLUORESCENT FIXTURE MOUNTING | B

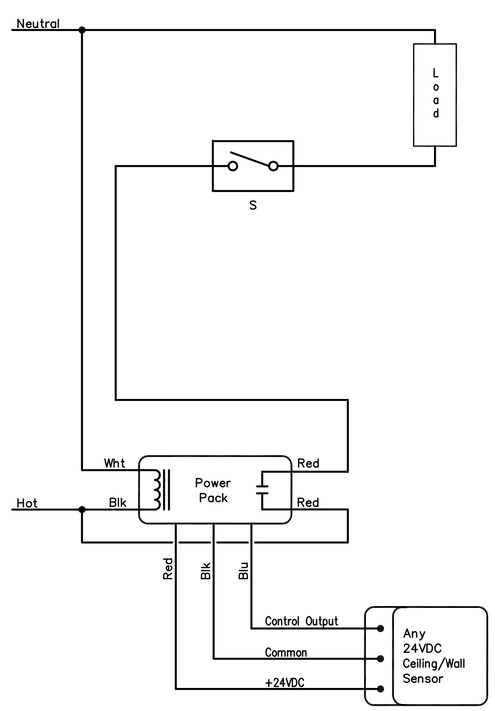

NOTES:

1. POWER PACKS ARE NOT INDICATED ON PLAN DRAWINGS. FURNISH AND INSTALL POWER PACKS AS REQUIRED. POWER PACK TO BE COMPATIBLE WITH ELECTRONIC BALLASTS AND FLUORESCENT. SENSOR AND POWER PACK SHALL HAVE 5 YEAR WARRANTY AND BE UL LISTED.
2. ACCEPTABLE MANUFACTURERS INCLUDE WATT-STOPPER, INC. AND SENSOR SWITCH.

C / E0.1 SWITCHED OCCUPANCY SENSOR CONTROL
NOT TO SCALE

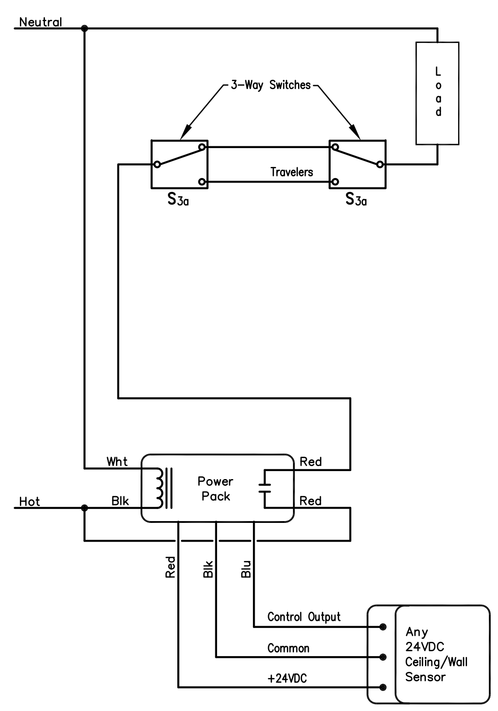

NOTES:

1. POWER PACKS ARE NOT INDICATED ON PLAN DRAWINGS. FURNISH AND INSTALL POWER PACKS AS REQUIRED. POWER PACK TO BE COMPATIBLE WITH ELECTRONIC BALLASTS AND FLUORESCENT. SENSOR AND POWER PACK SHALL HAVE 5 YEAR WARRANTY AND BE UL LISTED.
2. ACCEPTABLE MANUFACTURERS INCLUDE WATT-STOPPER, INC. AND SENSOR SWITCH.

D / E0.1 3-WAY SWITCH OCCUPANCY SENSOR CONTROL
NOT TO SCALE

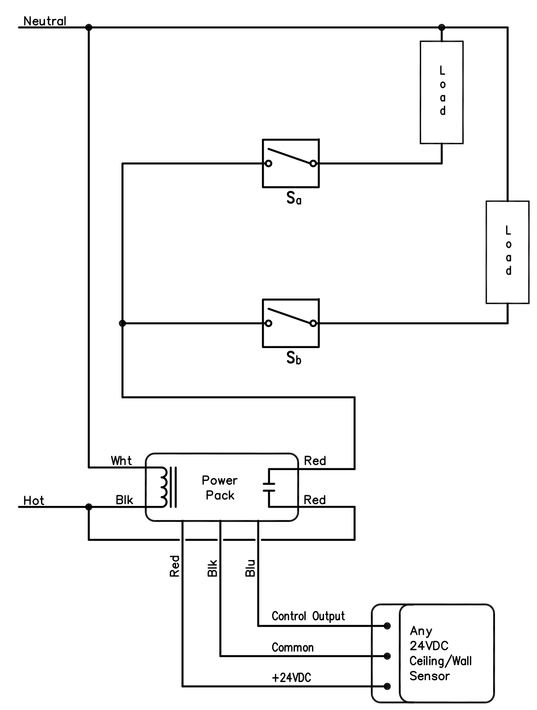

NOTES:

1. POWER PACKS ARE NOT INDICATED ON PLAN DRAWINGS. FURNISH AND INSTALL POWER PACKS AS REQUIRED. POWER PACK TO BE COMPATIBLE WITH ELECTRONIC BALLASTS AND FLUORESCENT. SENSOR AND POWER PACK SHALL HAVE 5 YEAR WARRANTY AND BE UL LISTED.
2. ACCEPTABLE MANUFACTURERS INCLUDE WATT-STOPPER, INC. AND SENSOR SWITCH.

F / E0.1 DUAL SWITCHED OCCUPANCY SENSOR CONTROL
NOT TO SCALE

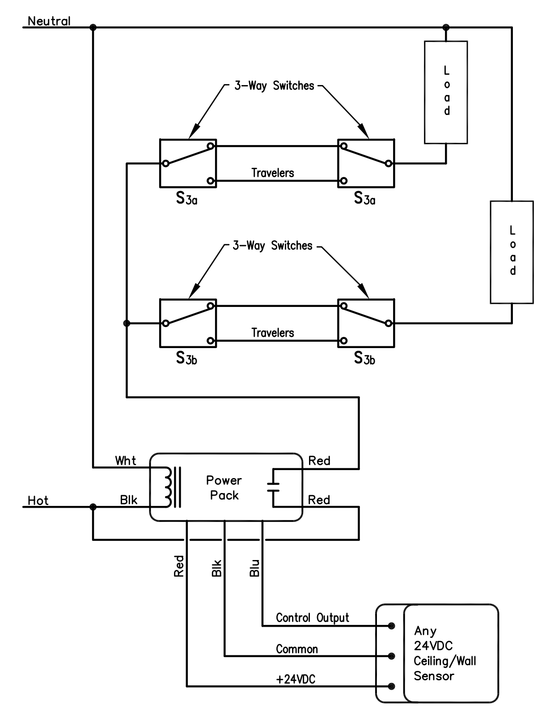

NOTES:

1. POWER PACKS ARE NOT INDICATED ON PLAN DRAWINGS. FURNISH AND INSTALL POWER PACKS AS REQUIRED. POWER PACK TO BE COMPATIBLE WITH ELECTRONIC BALLASTS AND FLUORESCENT. SENSOR AND POWER PACK SHALL HAVE 5 YEAR WARRANTY AND BE UL LISTED.
2. ACCEPTABLE MANUFACTURERS INCLUDE WATT-STOPPER, INC. AND SENSOR SWITCH.

F / E0.1 DUAL 3-WAY SWITCH OCCUPANCY SENSOR CONTROL
NOT TO SCALE

BURDETTE ENGINEERING
102 Pilgrim Road
Greenville, SC 29607
BEI JOB NO. 12860F1
(864) 297-8717
(864) 297-8719 (FAX)
EMAIL:Bei@BurdetteEngr.com

REVISION		DATE	BY
A	ISSUED FOR REVIEW	1/16/14	LOM/JJK

PROJECT NO. 12860F1
DATE 12/6/13
DRAWN BY LJK/TMP
CHECKED BY DJB

UNIVERSITY OF SC UPSTATE
LIBRARY LIGHTING REPLACEMENT
SC PROJECT NO. H34-9543-JM-F
SPARTANBURG, SOUTH CAROLINA

SHEET NUMBER
E0.1

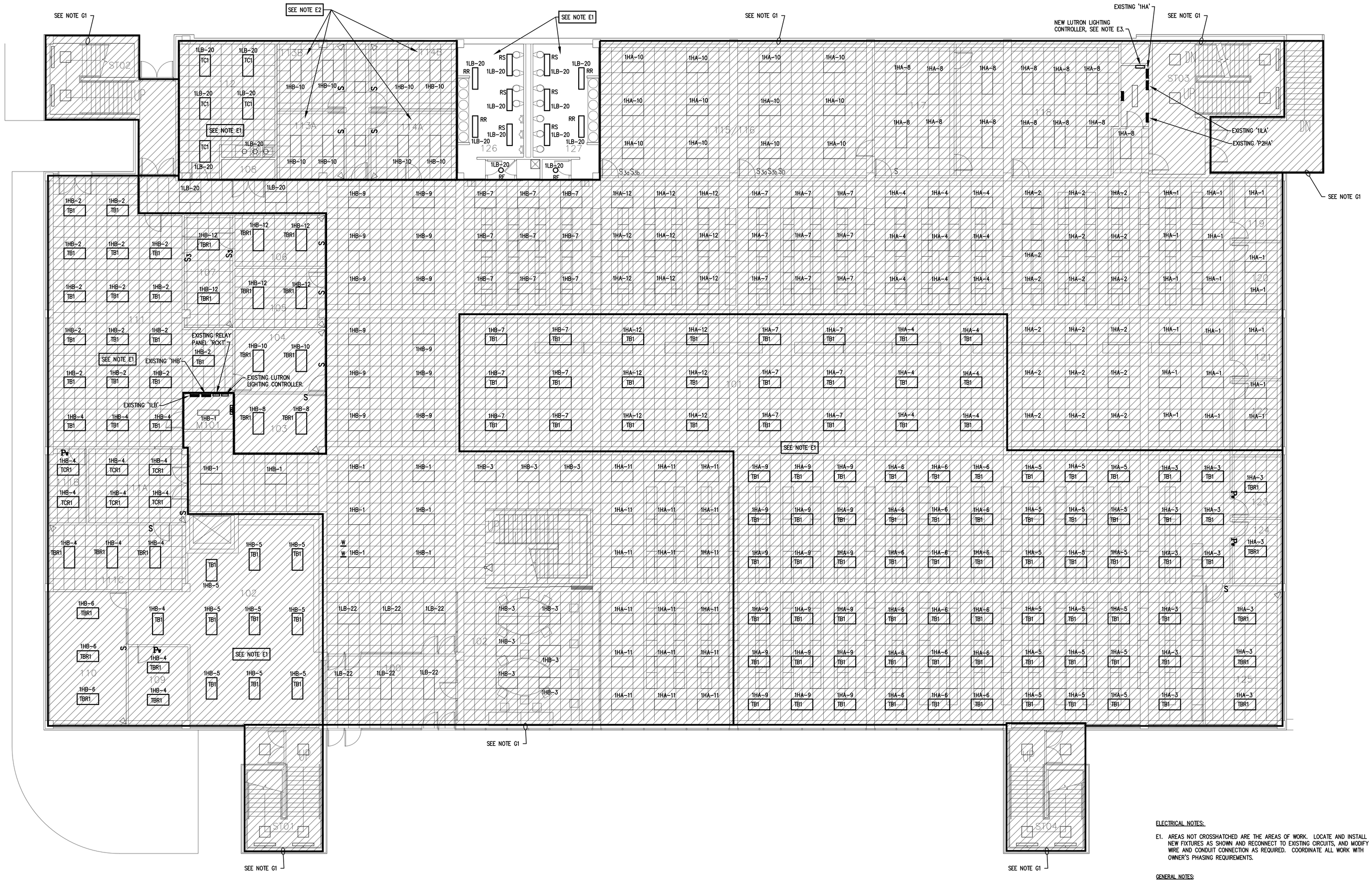

A E1.1 ELECTRICAL LIGHTING PLAN – 1st FLOOR
SCALE: 1/8" = 1'-0"

ELECTRICAL NOTES:

E1. AREAS NOT CROSSHATCHED ARE THE AREAS OF WORK. LOCATE AND INSTALL NEW FIXTURES AS SHOWN AND RECONNECT TO EXISTING CIRCUITS, AND MODIFY WIRE AND CONDUIT CONNECTION AS REQUIRED. COORDINATE ALL WORK WITH OWNER'S PHASING REQUIREMENTS.

GENERAL NOTES:

G1. CROSSHATCHED AREAS INDICATE NO WORK TO BE DONE IN THIS AREA.

BURDETTE ENGINEERING
102 Pilgrim Road
Greenville, SC 29607
(864) 297-8717
(864) 297-8719 (FAX)
EMAIL:Bei@BurdetteEngr.com
BEI JOB NO. 12860FI

REVISION		DATE	BY
A	ISSUED FOR REVIEW	1/16/14	LOM/LJK

PROJECT NO. 12860FI
DATE D/W/G
DRAWN BY LJK/TMP
CHECKED BY DJB

UNIVERSITY OF SC UPSTATE LIBRARY LIGHTING REPLACEMENT

UPSTATE USC

S.C PROJECT NO. H34-9543-IM-F

SPARTANBURG, SOUTH CAROLINA

SHEET NUMBER

E1.1

OF SHEETS

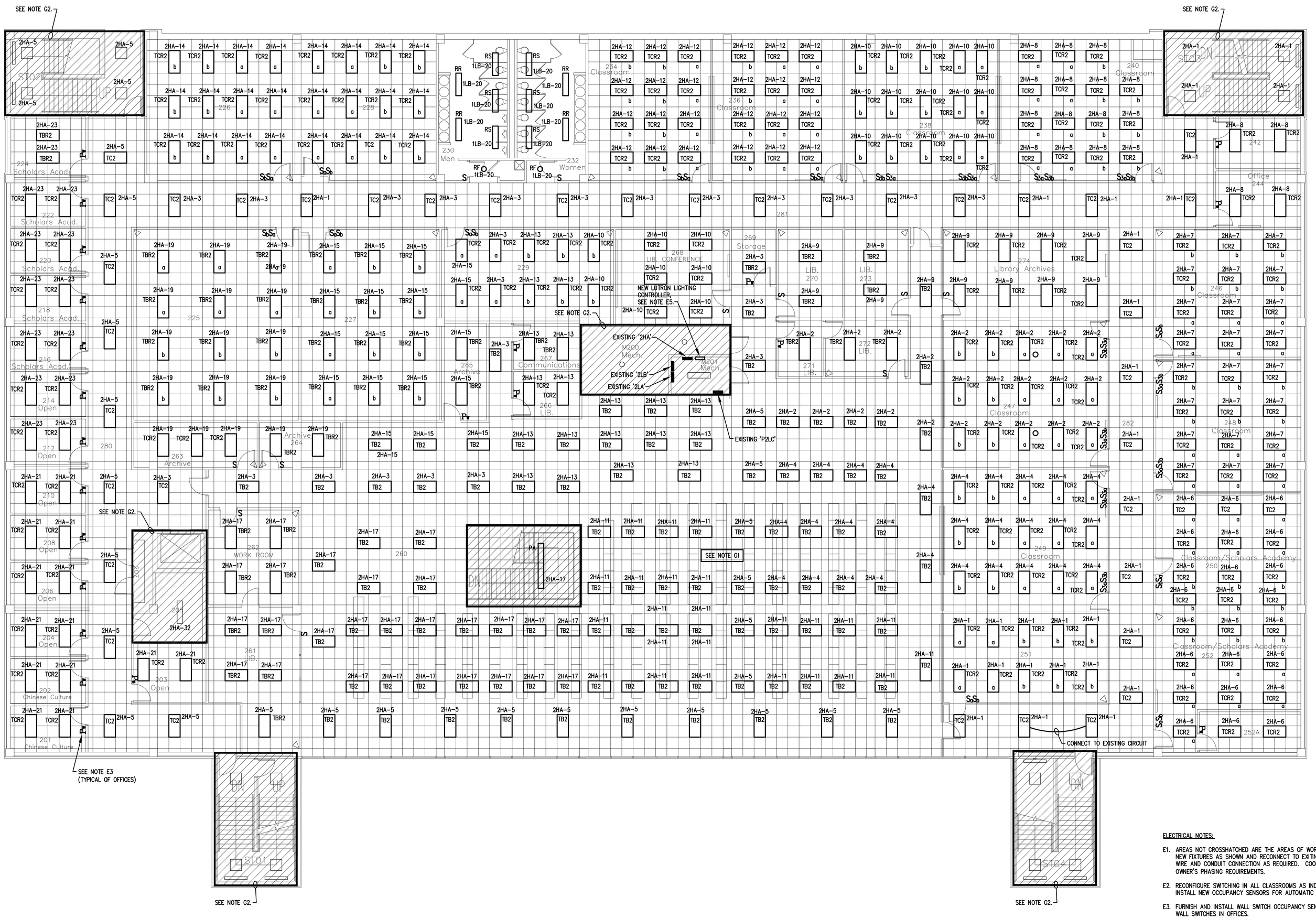

A E1.2 ELECTRICAL LIGHTING PLAN – 2nd FLOOR
SCALE: 1/8" = 1'-0"

ELECTRICAL NOTES:

E1. AREAS NOT CROSSHATCHED ARE THE AREAS OF WORK. LOCATE AND INSTALL NEW FIXTURES AS SHOWN AND RECONNECT TO EXITING CIRCUITS, AND MODIFY WIRE AND CONDUIT CONNECTION AS REQUIRED. COORDINATE ALL WORK WITH OWNER'S PHASING REQUIREMENTS.

E2. RECONFIGURE SWITCHING IN ALL CLASSROOMS AS INDICATED AND FURNISH AND INSTALL NEW OCCUPANCY SENSORS FOR AUTOMATIC LIGHTING SHUTOFF.

E3. FURNISH AND INSTALL WALL SWITCH OCCUPANCY SENSORS IN PLACE OF ALL WALL SWITCHES IN OFFICES.

E4. FURNISH AND INSTALL CEILING MOUNTED OCCUPANCY SENSORS IN REMAINING ROOMS AS SHOWN TO WORK IN CONJUNCTION WITH THE EXISTING WALL SWITCH.

E5. FURNISH AND INSTALL A NEW LIGHTING CONTROL PANEL, LUTRON SOFTSWITCH 128 #XPS20-FT. PLACE THE NEW LIGHTING CONTROL PANEL ADJACENT TO EXISTING PANEL "2HA". INTERCEPT LIGHTING CIRCUITS 2HA-1 THROUGH 2HA-15, 2HA-17, 19, 21, AND 23 AND REROUTE THROUGH THE NEW LIGHTING CONTROLLER. ALSO FURNISH AND INSTALL A NEW LUTRON OVERRIDE SWITCH AT THE TOP OF THE MONUMENTAL STAIRS AND ANOTHER ONE IN THE OFFICE CORRIDOR AND ROUTE REQUIRED CONTROL WIRING IN 3/4"C BACK TO THE LIGHTING CONTROLLER.

GENERAL NOTES:

G1. CONTRACTOR SHALL TAKE CARE TO COMPLETELY COVER ALL BOOK STACKS WITH PLASTIC WHEN WORKING IN THOSE AREAS.

G2. CROSSHATCHED AREAS INDICATE NO WORK TO BE DONE IN THIS AREA.

BURDETTE ENGINEERING
102 Pilgrim Road
Greenville, SC 29607
BEI JOB NO. 12860FI
(864) 297-8717
(864) 297-8719 (FAX)
EMAIL:Bei@BurdetteEngr.com

REVISION		DATE	BY
A	ISSUED FOR REVIEW	1/16/14	LCM/LJK

PROJECT NO. 12860
DATE 12/4/13
DRAWN BY LJK/TMP
CHECKED BY DJB

UNIVERSITY OF SC UPSTATE LIBRARY LIGHTING REPLACEMENT

UPSTATE USC

SC PROJECT NO. H34-9543-JM-F
SPARTANBURG, SOUTH CAROLINA

SHEET NUMBER
E1.2
OF SHEETS

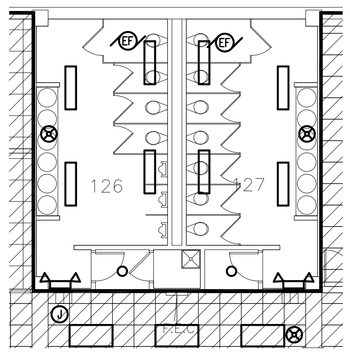

B ED1.1 ELECTRICAL DEMOLITION PLAN – 1ST FLOOR
SCALE: 1/8" = 1'-0"

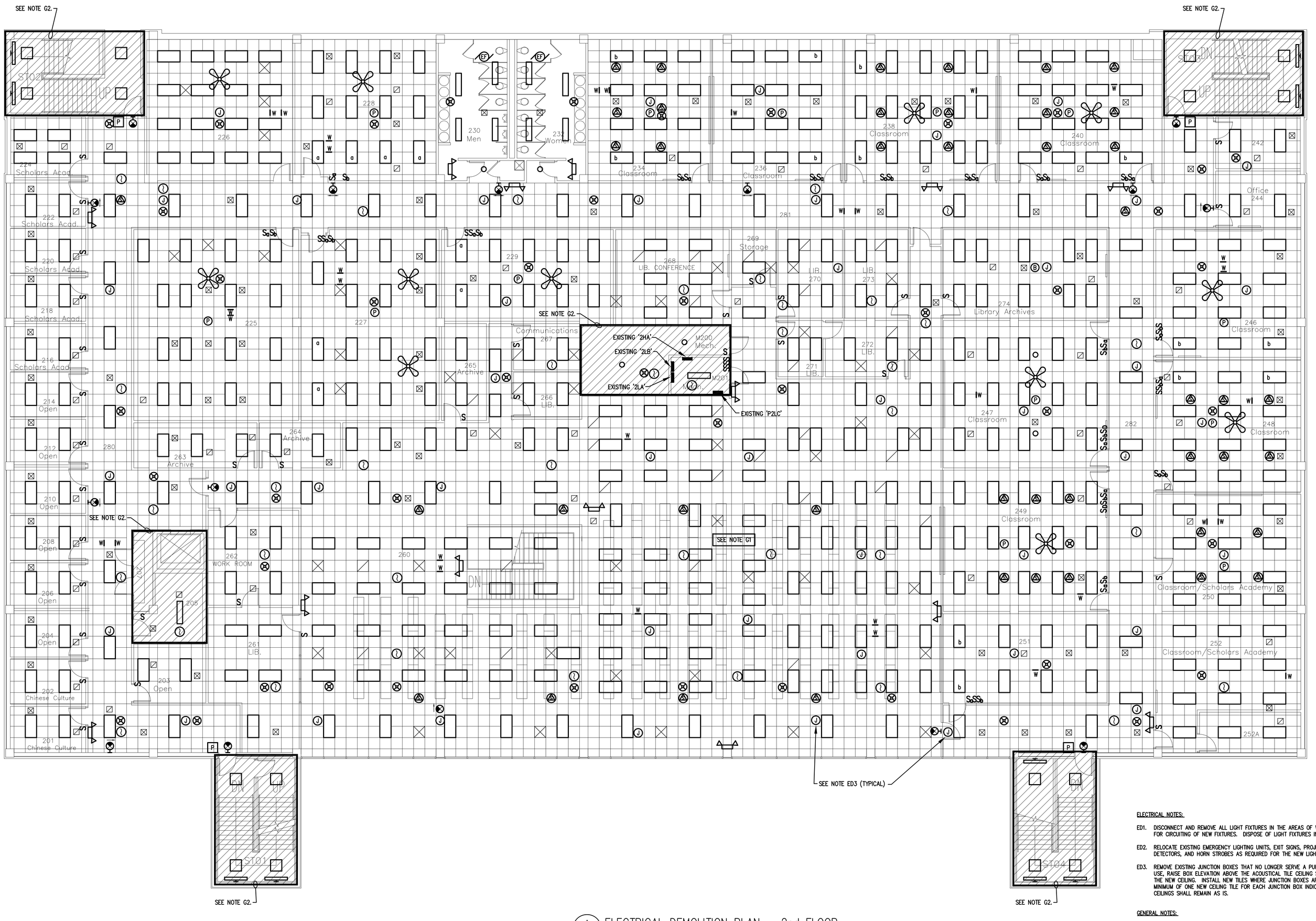

A ED1.1 ELECTRICAL DEMOLITION PLAN – 2nd FLOOR
SCALE: 1/8" = 1'-0"

ELECTRICAL NOTES:

ED1. DISCONNECT AND REMOVE ALL LIGHT FIXTURES IN THE AREAS OF WORK BUT MAINTAIN EXISTING WIRING FOR CIRCUITING OF NEW FIXTURES. DISPOSE OF LIGHT FIXTURES IN A SUITABLE MANNER.

ED2. RELOCATE EXISTING EMERGENCY LIGHTING UNITS, EXIT SIGNS, PROJECTORS, CEILING FANS, WI-FI, SMOKE DETECTORS, AND HORN STROBES AS REQUIRED FOR THE NEW LIGHTING LAYOUTS.

ED3. REMOVE EXISTING JUNCTION BOXES THAT NO LONGER SERVE A PURPOSE. FOR JUNCTION BOXES STILL IN USE, RAISE BOX ELEVATION ABOVE THE ACOUSTICAL TILE CEILING SO THAT BOXES ARE CONCEALED BY THE NEW CEILING. INSTALL NEW TILES WHERE JUNCTION BOXES ARE REMOVED OR RAISED. FURNISH A MINIMUM OF ONE NEW CEILING TILE FOR EACH JUNCTION BOX INDICATED. JUNCTION BOXES IN GYP BOARD CEILINGS SHALL REMAIN AS IS.

GENERAL NOTES:

G1. CONTRACTOR SHALL TAKE CARE TO COMPLETELY COVER ALL BOOK STACKS WITH PLASTIC WHEN WORKING IN THOSE AREAS.

G2. CROSSHATCHED AREAS INDICATE NO WORK TO BE DONE IN THIS AREA.

BURDETTE ENGINEERING
102 Pilgrim Road
Greenville, SC 29607
BEI JOB NO. 12860F1
(864) 297-8717
(864) 297-8719 (FAX)
EMAIL:Bei@BurdetteEngr.com

REVISION		DATE	BY
A	ISSUED FOR REVIEW	1/16/14	LOM/LJK

PROJECT NO. 12860F1
DATE 12/4/13
DRAWN BY LJK/TMP
CHECKED BY DJB

UNIVERSITY OF SC UPSTATE LIBRARY LIGHTING REPLACEMENT

UPSTATE USC

SC PROJECT NO. H34-9543-JM-F

SPARTANBURG, SOUTH CAROLINA

SHEET NUMBER

ED1.2

OF SHEETS